R17..

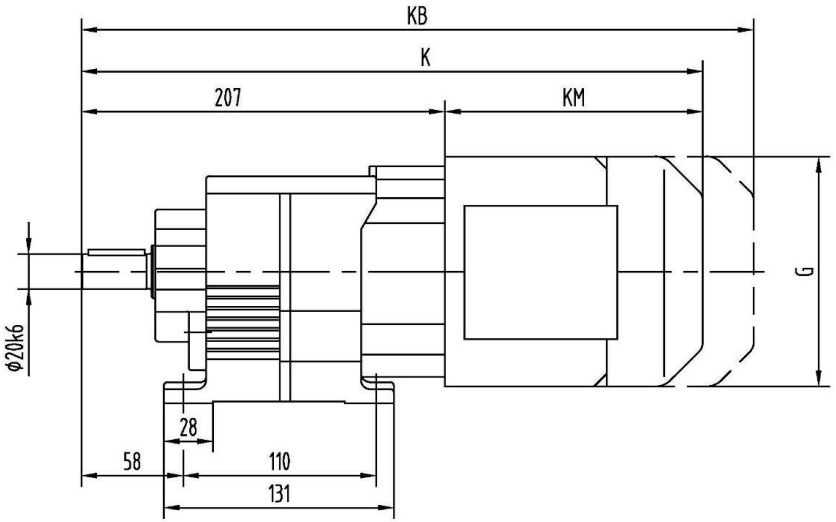

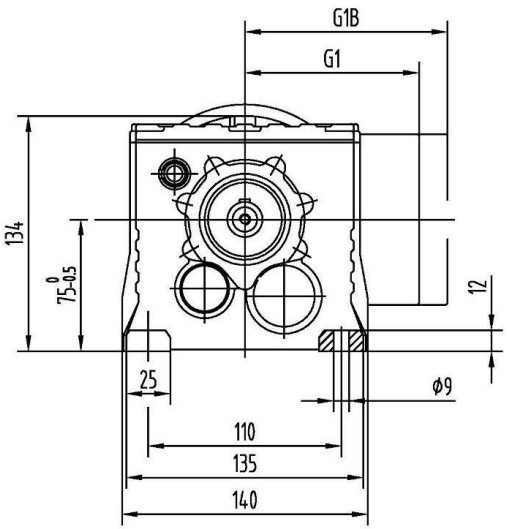

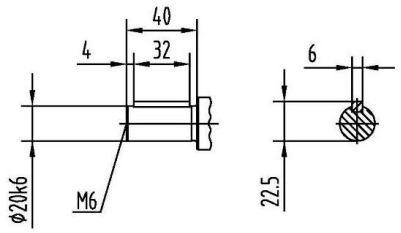

	DR63..	DT71D	DT80..							
G (AC)	120	138	148							
G1 (AD)	95.2	103	108							
G1B										
K	388	406	437.5							
KB	435.5	456.5	488							
KM (LB)	181	199	230.5							

Pos.	Amount	Drawing nr.:	Material	Measurements
			Units:	Drawn by:
			Scale: 1:3	Sheet:
			Date:	Revision:
Projection:	Format:		Title: R17..	