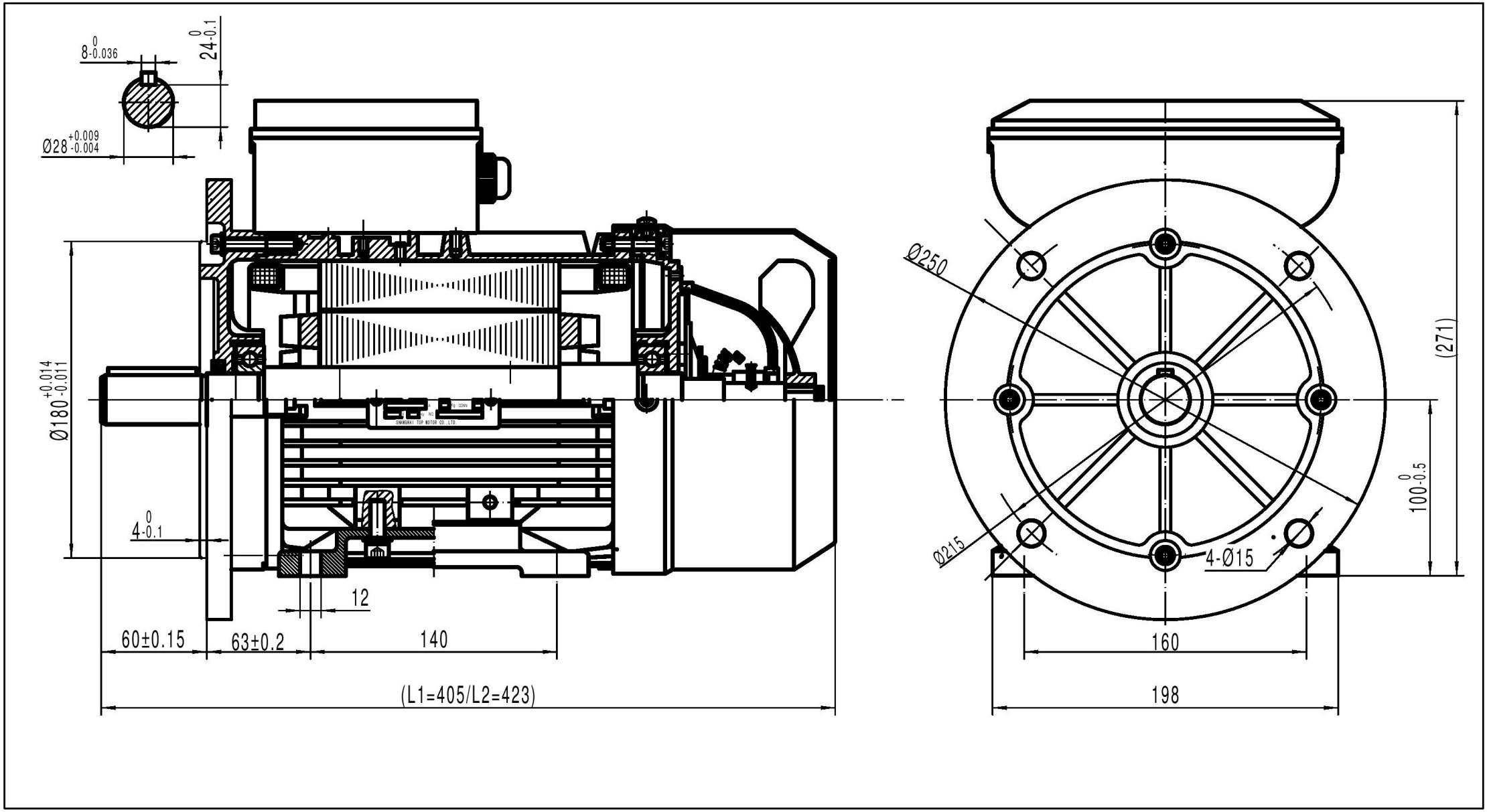
8-0.036
24-0.1
Ø28+0.009-0.004
Ø180+0.014-0.011
4-0.1
12
60±0.15
63±0.2
140
(L1=405/L2=423)
Ø250
Ø215
4-Ø15
(271)
100-0.5
160
198